DOOSAN

Construction Equipment

DX75-5B

Engine Power	39 kW (52.3 HP) 2,200 rpm
Operational Weight	6,980 ~ 7,420 kg
Bucket Capacity (SAE)	0.3 m^3

DOOSAN DX75-5B HYDRAULIC EXCAVATOR :

A NEW MODEL WITH ADVANCED FEATURES

DX 75-5B

The key phrase during the development of the DX75-5B was “giving optimum value to the end users.” This translates, in concrete terms, into : Increased production and improved fuel economy thanks to electronic optimization of the hydraulic system and the improved Yanmar Engine(Yanmar 4TNV98-EXS). Improved ergonomics, increased comfort and excellent all-round visibility ensure a safe and pleasant working environment.

Improved reliability through the use of high performance materials combined with new methods of structural stress analysis have led to increased component life expectancy, thus reducing running costs. Reduced maintenance increases the availability of the excavator and reduces running costs.

Comparison with Preceding Models

① Increase in productivity

12%

② Increase in fuel efficiency

12%

③ Faster travel speed

4%

* The above data are based on the manufacturer’s standard testing conditions, and thus may vary slightly depending on each conditions.

NEWLY ADDED FEATURE

"VERSATILE MINI" DX75-5B

Widely recognized by the market for its highest performance, flexible and stable operation, and longer service life of parts.

HIGH-EFFICIENCY HYDRAULIC SYSTEM

Engine energy efficiency maximized with the enhanced hydraulic system.

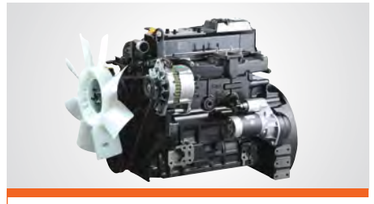

ENGINE

Electric controller mechanical engine produces outstanding power and is highly durable, which results in excellent operation in high-load operations. In addition, it features low noise and low emissions, making it suitable for operation in noise sensitive areas and at night.

RIGID FRONT

One-piece-type casting and increased thickness for greater durability.

NEWLY DESIGNED WORK LIGHT

Higher brightness and wider lighting area improve support for night-time work.

LARGER CABIN

Larger cabin, same size as middle-large excavator models. Sufficient operating space, low noise level, and wider field of view.

EASY MAINTENANCE

Modular design for convenient and easy onsite maintenance work.

FULL-AUTOMATIC FUEL HEATING

Automatic fuel heating to prevent fuel freezing in an intense cold weather.

REINFORCED TRACK FRAME

Improved design has enhanced the durability and stability of the mechanism.

* it may contain photographs of machines with specifications that differ from those of machines sold in your area.

PERFORMANCE & PRODUCTIVITY

Comparison with Preceding Models

FASTER TRAVEL SPEED

4%

*The above data are based on the manufacturer's standard testing conditions, and thus may vary slightly depending on each conditions.

ENHANCED FRONT AND SIDE LIFTING CAPACITY

The engine power and hydraulic system are balanced to minimize output loss and increase the lifting capacity of the equipment, enhancing workability in adverse conditions.

1

2

3

4

1 DOZER BLADE (OPTIONAL)

The dozer shovel is useful for leveling and clean-up work and for stabilizing the machine during digging applications.

2 SWING DEVICE

Shocks during rotation are minimized, while the increased torque option ensures rapid cycles.

3 HIGHER GRADEABILITY AND WORK CAPABILITY

Thanks to the strong traction force combined with the highest swing torque in its class, the DX75-5B delievers superior capability when working on a slope.

4 POWERFUL TRAVEL TRACTION

Powerful travel traction for undisturbed operation on slopes and wet ground.

DURABILITY & RELIABILITY

STABLE DURABILITY PROVED IN DIVERSE WORK ENVIRONMENTS

User demand for smaller-capacity equipment has been satisfied with enhanced front attachments, further reinforced upper structure, and high-durability frame and parts that have been proven at many worksites over a long period of time.

REINFORCED BOOM AND ARM

The boom lower plate is designed as an integral type to reduce weld joints and stress concentration. The thicknesses of the side and upper plates of the arm have been increased for further reinforcement.

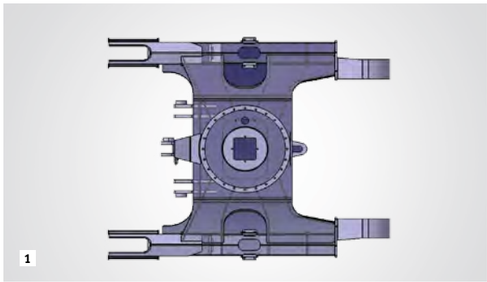

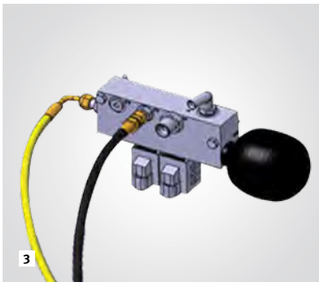

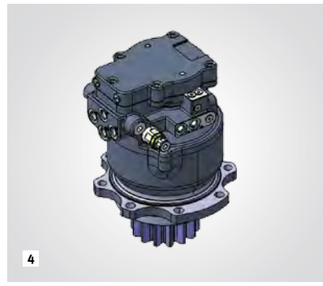

1 OPTIMIZED TRACK FRAME STRUCTURE

The new track frame structure distributes stress concentration to improve parts durability and work stability.

2 LOWER STRUCTURE

The newly designed, one-piece type cast idler strengthens joints by reducing assembly steps. The low roller has been changed to the center-fixed type to enhance the stability of the lower structure and the strength of the track frame.

3 INTEGRATED ENERGY ACCUMULATOR AND SOLENOID VALVE

The number of pipe joints has been reduced for more reliability.

4 IMPROVED SWING DEVICE

The performance of the swivel motor has been further improved, including stable rotation, precise braking, and excellent shock absorption.

5 MAIN HYDRAULIC HOSE

Pipes have been replaced with hoses to reduce the risk of leakage.

FUEL EFFICIENCY

FITTED WITH THE INDUSTRY-PROVEN YANMAR ELECTRONIC PUMP ENGINE

Oil separator and filer to improve the fuel discharge and durability of the engine. The compatibility of the hydraulic and drive systems has increased the oil discharge rate with reduced flow loss.

Comparison with Preceding Models

INCREASE IN PRODUCTIVITY

12%

INCREASE IN FUEL EFFICIENCY

12%

*The above data are based on the manufacturer's standard testing conditions, and thus may vary slightly depending on each conditions.

ENGINE SPECIFICATIONS

Power	39 kW (52.3 HP) 2,200 rpm
No. of Cylinders	4
Displacement	3,319 cc

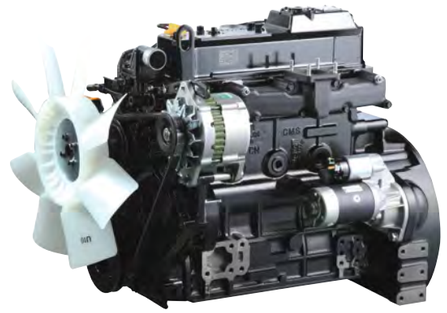

1 FUEL PRE FILTER

Removes over 99 % of harmful foreign substances, extends the service life of engine parts with improved lubrication performance.

2 AIR PRE FILTER

Reducing the risk of engine contamination and filtering efficiency increased

OPERATOR COMFORT

Larger cabin, same size as middle-large excavator models. Sufficient operating space, low noise level, and wider field of view. Noise and vibration in the cabin have been minimized, while the air conditioning system ensures an optimized work environment. A safe and pleasant environment is a precondition for enhanced work efficiency.

WIDER FIELD OF VIEW

The wide cabin window provides a wider field of view for greater work efficiency and safety.

ADJUSTABLE SEAT

The driver's seat can be adjusted by height and tilted to fit for the operator's position, thereby reducing fatigue and improving work efficiency.

ANALOG DASHBOARD

The intuitively designed dashboard clearly displays information on the status of the equipment.

AIR CONDITIONING

The high performance air conditioning provides an air flow which is adjusted and electronically controlled for the prevailing conditions. Five operating modes ensure even the most demanding operator will be satisfied.

1 UPGRADED CONTROL PANEL WITH CENTRALIZED SWITCHES

The metallic interior panels are similar to those of luxury cars. The switches are clustered for more convenient and efficient operation.

2 EMERGENCY ENGINE STOP BUTTON

The emergency stop button can cut off fuel feed to stop the engine in the event of an emergency without having to use the start key.

NEW WORK LIGHT

Upgraded brightness provides more lighting for nighttime works.

CONVENIENT, FAST, ECONOMICAL MAINTENANCE

Upgraded maintanence features provide customers with even greater convenience.

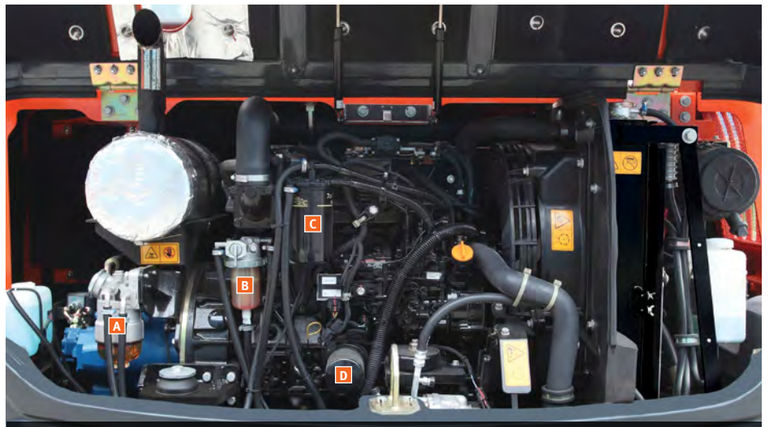

EASY FILTER REPLACEMENT

The filters are clustered for convenient maintenance. The dual fuel filtering and water separation function protects the engine from poor quality fuels.

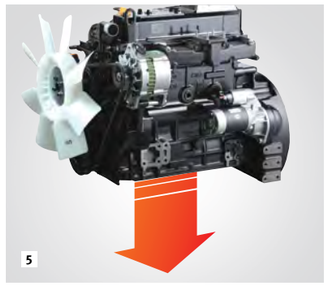

1 DETACHABLE TRACK GUARD

The track guards are bolted to the frame for easier maintenance of the track.

2 BATTERY COVER

The reinforced battery cover is resistant to fracture and can store a grease gun and a tool box.

3 GAS SPRING CYLINDER

The new gas spring enables easier opening and closing of the engine cover, including full opening for engine maintenance.

4 FUEL COOLER AND RADIATOR

The independent type fuel chiller and radiator facilitates installation and replacement, reducing maintenance time.

5 FAST ENGINE OIL DRAIN

Engine oil can be drained quickly without spillage to prevent environmental pollution.

6 LOW NOISE / VIBRATION TECHNOLOGY

Reduces vibration and noise, extending the lifespan of hydraulic units and parts.

TECHNICAL SPECIFICATIONS

ENGINE

Model
YANMAR \ 4TNV98-EXS

Number of cylinders
4

Nominal flywheel power
Gross 39 KW (53 PS) @ 2,200 rpm
Net 36.5 KW (49.6 PS) @ 2,200 rpm

Max. torque
19.1~20.8 kgf.m / 1,650 rpm

Piston displacement
3,319 cc

Bore & stroke
Φ98 x 110 mm

Starter
12 V x 3.5 kW

Batteries
2 x 12 V / 100 Ah

HYDRAULIC SYSTEM

Main pumps
1 variable displacement axial piston pumps
2 X 70.4 liter/min

Pilot pump
Gear pump - max flow: 19.6 liter/min at 2,200 rpm

Maximum system pressure
Boom / Arm / Bucket : 250 kg/cm² (245 bar)
Travel : 250 kg/cm² (245 bar)
Swing : 220 kg/cm² (216 bar)

HYDRAULIC CYLINDERS

Cylinders	Quantity	Bore x Rod diameter x stroke
Boom	1	110 x 65 x 865 mm
Arm	1	100 x 65 x 813 mm
Bucket	1	85 x 55 x 680 mm

SWING MECHANISM

Swing speed : 0 to 10.4 rpm

UNDERCARRIAGE

Number of rollers and track shoes per side
Upper rollers : 1 EA
Lower rollers : 5 EA
Shoes : 38 EA
Tumbler Distance : 2,110 mm

DRIVE

Travel speed (fast/slow)
4.6 / 2.9 km/h

Maximum traction force
3,500 / 5,800 Kgf

Maximum grade
30° / 58 %

ENVIRONMENT

Sound level guarantee
99 dB

Cab sound level
74 dB

REFILL CAPACITIES

Fuel tank
130 ℓ

Cooling system (Radiator capacity)
10 ℓ

Engine oil
11.6 ℓ

Swing drive
1.5 ℓ

Final drive (each)
1.3 ℓ

Hydraulic tank
90 ℓ

WEIGHT

Boom : 3,620 mm Arm : 1,670 mm Bucket : SAE 0.3 m³

	Shoe width	Operating weight	Ground pressure (kgf/cm²)
Triple Grouser	450 mm	7,420 kg (with dozer)	0.36 kgf/cm²

BUCKET

	CAPACITY (m³)	BUCKET WIDTH (mm)	
	SAE	W/CUTTER	W/O CUTTER
STD. BUCKET	0.3	859.5	787

DIMENSIONS

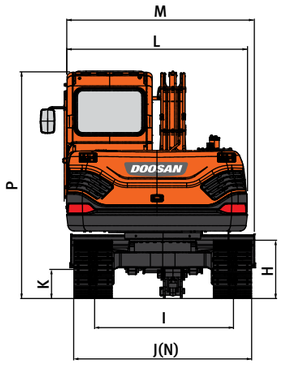

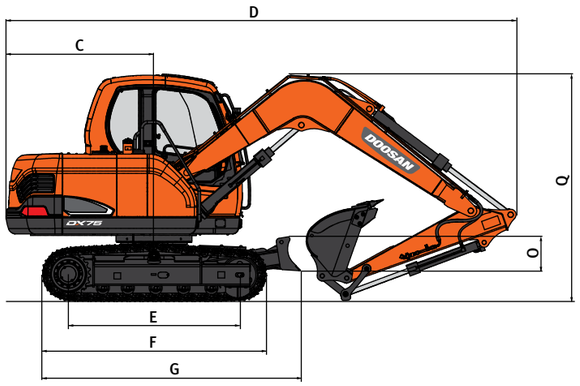

DIMENSIONS

BOOM TYPE (ONE PIECE)		**(mm)**	**3,620**
ARM TYPE		**(mm)**	**1,670**
BUCKET TYPE (SAE)		**(m³)**	**0.3**
C	**TAIL SWING RADIUS**	(mm)	1,750
D	**SHIPPING LENGTH**	(mm)	6,030
E	**TUMBLER DISTANCE**	(mm)	2,110
F	**TRACK LENGTH**	(mm)	2,750
G	**TRACK LENGTH(DOZER)**	(mm)	3,210
H	**TRACK HEIGHT**	(mm)	695
I	**TRACK GAUGE**	(mm)	1,650
J	**TRACK WIDTH**	(mm)	2,100
K	**CAR BODY CLEARANCE**	(mm)	370
L	**BODY WIDTH**	(mm)	2,130
M	**SHIPPING WIDTH**	(mm)	2,180
N	**DOZER WIDTH**	(mm)	2,100
O	**DOZER HEIGHT**	(mm)	418
P	**SHIPPING HEIGTH**	(mm)	2,680
Q	**SHIPPING HEIGTH(BOOM)**	(mm)	2,610

DIGGING FORCE (ISO)

Bucket (SAE)	**0.3 m³**
Digging force	5,340 kgf
	52.36 kN
	11,772.7 lbf

Arm	**1,670 mm**
Digging force	3,690 kgf
	36.19 kN
	8,135 lbf

WORKING RANGES

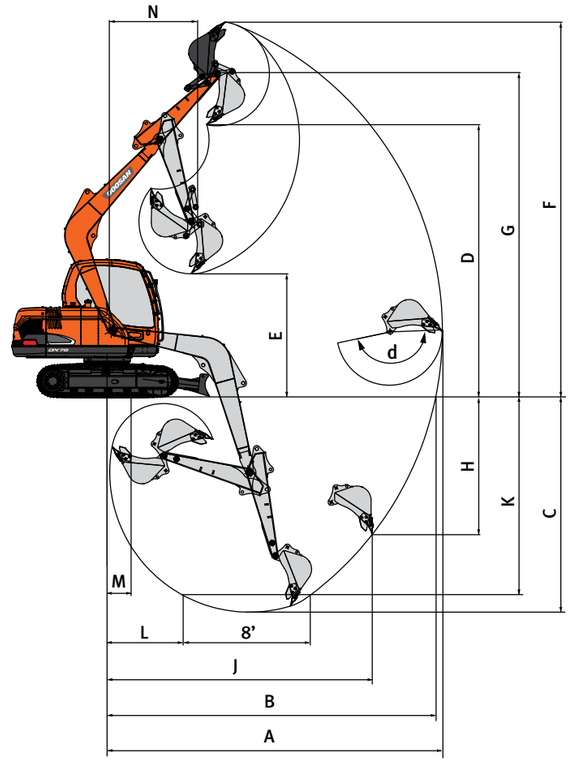

WORKING RANGE

BOOM TYPE (ONE PIECE)		**(mm)**	**3,620**
ARM TYPE		**(mm)**	**1,670**
BUCKET TYPE (SAE)		**(m³)**	**0.3**
A	**MAX. DIGGING REACH**	(mm)	6,270
B	**MAX.DIGGING REACH (Gradeability)**	(mm)	6,115
C	**MAX. DIGGING DEPTH**	(mm)	4,080
D	**MAX. LOADING HEIGHT**	(mm)	5,170
E	**MIN. LOADING HEIGHT**	(mm)	2,345
F	**MAX. DIGGING HEIGHT**	(mm)	7,100
G	**MAX. BUCKET PIN HEIGHT**	(mm)	6,150
H	**MAX. VERTICAL WALL DEPTH**	(mm)	2,670
J	**MAX. RADIUS VERTICAL**	(mm)	4,750
K	**MAX. DEPTH TO 8' LINE**	(mm)	3,725
L	**MIN. RADIUS 8' LINE**	(mm)	1,120
M	**MIN. DIGGING REACH**	(mm)	560
N	**MIN. SWING RADIUS**	(mm)	1,745
d	**BUCKET ANGLE**	(deg)	165

LIFTING CAPACITY

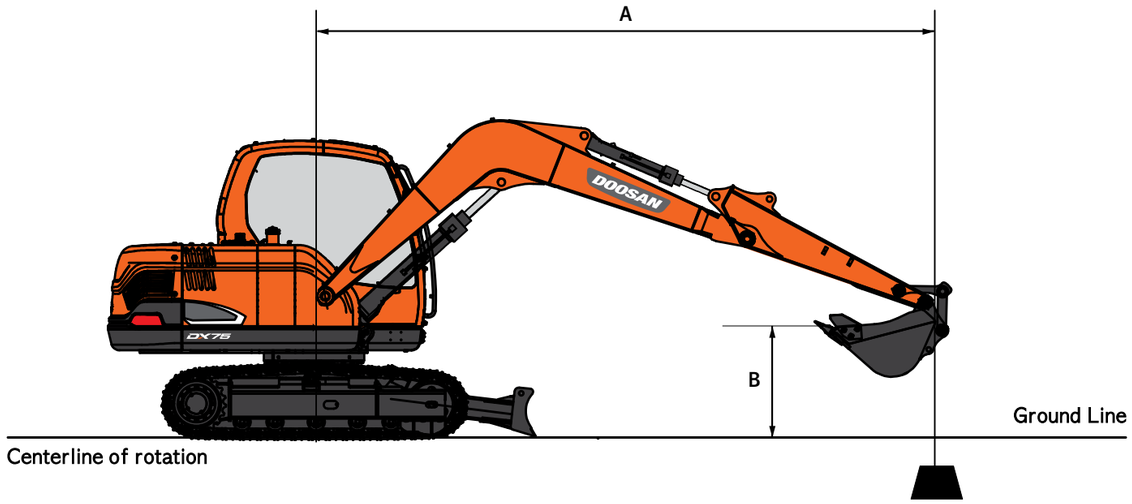

WITH DOZER

TRACK WIDTH : 2.1 m (7' 2") STD TRACK BOOM :3.620 m (11'9") ARM : 1.670 m (5' 6") BUCKET : SAE 0.3 m³ HEAPED SHOE : 450 mm (17.7") Unit : 1,000 kg

A(m) / B(m)	2	3	4	5	2	3	4	5	Max. Reach		
											A(m)
5			1.26 *	1.26 *					1.20 *	1.20 *	3.78
4			1.36 *	1.36 *	1.30 *	1.30 *			1.09 *	1.09 *	4.56
3	2.44 *	2.44 *	1.73 *	1.73 *	1.44 *	1.44 *	1.13	0.97	1.08 *	0.97	5.02
2			2.24 *	2.24 *	1.66	1.43	1.12	0.96	1.01	0.87	5.25
1			2.55	2.14	1.59	1.36	1.09	0.93	0.99	0.84	5.28
0			2.47	2.06	1.55	1.32	1.07	0.91	1.03	0.88	5.11
-1	3.95 *	3.95 *	2.45	2.05	1.53	1.30			1.17	1.00	4.72
-2	3.37 *	3.37 *	2.35 *	2.07	1.55	1.32			1.52	1.30	4.04
-3									1.44 *	1.44 *	2.89

1. LOAD POINT IS THE END OF THE ARM.
2. CAPACITIES MARKED WITH AN ASTERISK (*) ARE LIMITED BY HYDRAULIC CAPACITIES.
3. LIFT CAPACITIES SHOWN DO NOT EXCEED 75 % OF MINIMUN TIPPING LOADS OR 87 % OF HYDRAULIC CAPACITIES.
4. THE LEAST STABLE POSITION IS OVER THE SIDE.
5. THE TOTAL MASS OF MACHINE IS 7200 kg INCLUDED IN THIS MASS BOOM 3.62 m, ARM 1.67 m, 632 kg COUTNERWEIGHT, BUCKET WEIGHT 0 kg, ALL OPERATING FLUIDS AND A 75 kg OPERATOR.
6. LIFT CAPACITIES ARE IN COMPLIANCE WIHT ISO 10567.

: RATING OVER FRONT

: RATING OVER SIDE OR 360 degree

WITHOUT DOZER

TRACK WIDTH : 2.1 m (7' 2") STD TRACK BOOM :3.620 m (11'9") ARM : 1.670 m (5' 6") BUCKET : SAE 0.3 m³ HEAPED SHOE : 450 mm (17.7") Unit : 1,000 kg

A(m) / B(m)	1		2		3		4		5		Max. Reach		
													A(m)
5					1.26 *	1.26 *					1.20 *	1.20 *	3.78
4					1.36 *	1.36 *	1.30 *	1.30 *			1.09 *	1.09 *	4.56
3			2.44 *	2.44 *	11.73 *	1.73 *	1.44 *	1.44 *	1.13	0.97	1.08 *	0.97	5.02
2					2.24 *	2.24 *	1.66	1.43	1.12	0.96	1.01	0.87	5.25
1					2.55	2.14	1.59	1.36	1.09	0.93	0.99	0.84	5.28
0					2.47	2.06	1.55	1.32	1.07	0.91	1.03	0.88	5.11
-1	3.10 *	3.10 *	3.95 *	3.95 *	2.45	2.05	1.53	1.30			1.17	1.00	4.72
-2	5.03 *	5.03 *	3.37 *	3.37 *	2.35 *	2.07	1.55	1.32			1.52	1.3	4.04
-3											1.44 *	1.44 *	2.89

1. LOAD POINT IS THE END OF THE ARM.
2. CAPACITIES MARKED WITH AN ASTERISK (*) ARE LIMITED BY HYDRAULIC CAPACITIES.
3. LIFT CAPACITIES SHOWN DO NOT EXCEED 75 % OF MINIMUN TIPPING LOADS OR 87 % OF HYDRAULIC CAPACITIES.
4. THE LEAST STABLE POSITION IS OVER THE SIDE.
5. THE TOTAL MASS OF MACHINE IS 7200 kg INCLUDED IN THIS MASS BOOM 3.62 m, ARM 1.67 m, 631.2 kg COUTNERWEIGHT, BUCKET WEIGHT 273 kg, ALL OPERATING FLUIDS AND A 75 kg OPERATOR.
6. LIFT CAPACITIES ARE IN COMPLIANCE WIHT ISO 10567.

: RATING OVER FRONT

: RATING OVER SIDE OR 360 degree

DOOSAN DX75-5B HYDRAULIC EXCAVATOR :

A NEW MODEL WITH ADVANCED FEATURES

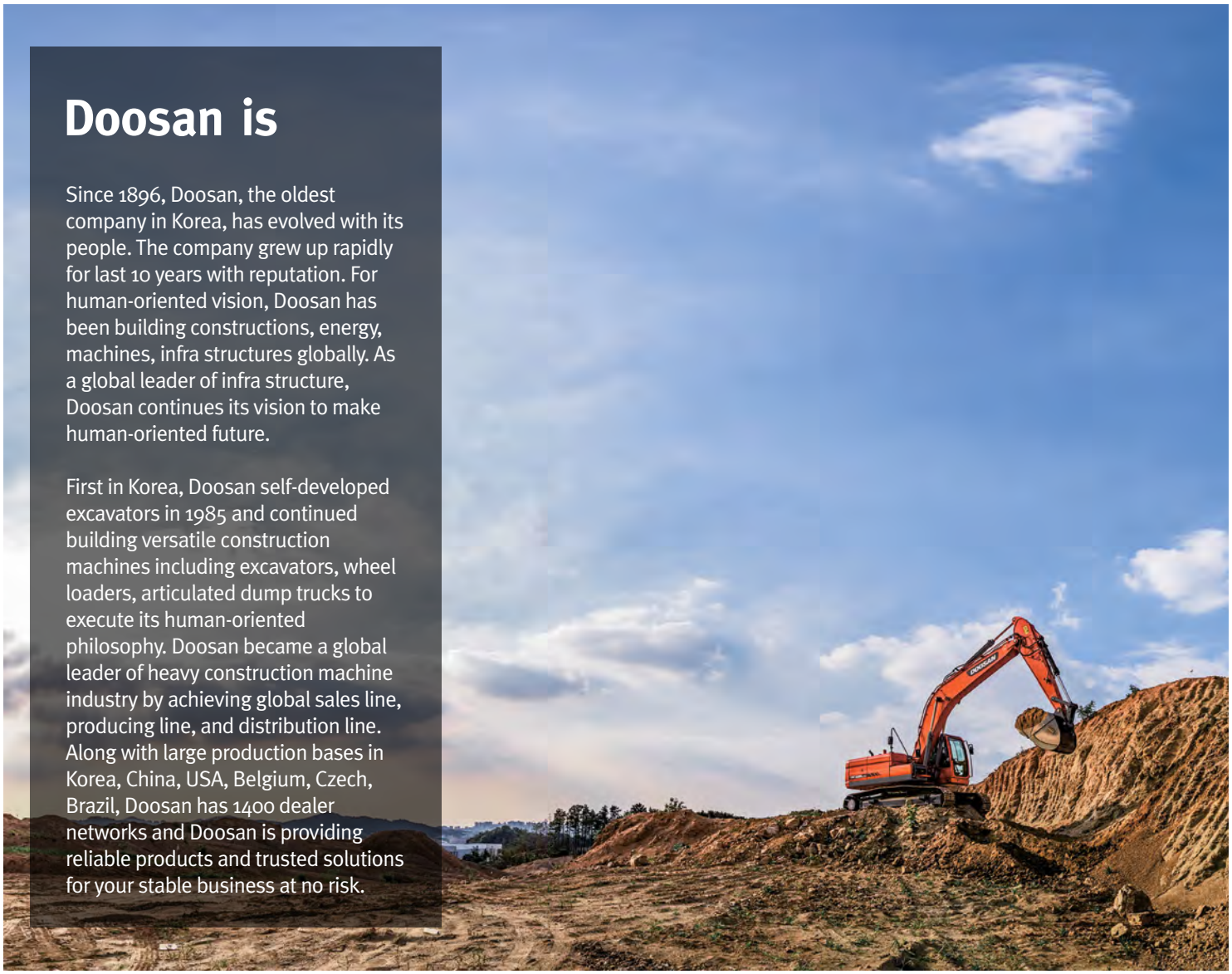

Doosan is

Since 1896, Doosan, the oldest company in Korea, has evolved with its people. The company grew up rapidly for last 10 years with reputation. For human-oriented vision, Doosan has been building constructions, energy, machines, infra structures globally. As a global leader of infra structure, Doosan continues its vision to make human-oriented future.

First in Korea, Doosan self-developed excavators in 1985 and continued building versatile construction machines including excavators, wheel loaders, articulated dump trucks to execute its human-oriented philosophy. Doosan became a global leader of heavy construction machine industry by achieving global sales line, producing line, and distribution line. Along with large production bases in Korea, China, USA, Belgium, Czech, Brazil, Doosan has 1400 dealer networks and Doosan is providing reliable products and trusted solutions for your stable business at no risk.

DIPBE1028-01-1606

Doosan Infracore Korea Office (HQ)
27F, Doosan Tower, 275, Jangchungdan-ro,
Jung-gu, Seoul, Korea(04563)
Tel : 82 2 3398 8114

www.doosaninfracore.com/ce/